SOUTHERN IRRIGATION

VR7/1 - 125 x 550

OCMIS

FEATURES

- VarioRain Transmission
- Speed compensation
- Hose cart flushout
- All galvanized frame & 4-wheel guncart
- Galvanized Reel
- Non-rusting aluminum elbow entering machine
- Triple gaskets on inlet elbow
- Crossover hose hook-up to either side of machine
- Emergency PTO rewind capability
- 20 feet of supply hose
- Ball & socket quick connects
- Fully adjustable guncart
- Adjustable part circle sprinkler gun
- Direct gear drive systems - no chains
- Hydraulic stabilizer legs and gun cart by tractor
- Hydraulic turntable by tractor
- Hydraulic drawbar by tractor
- Aquastar computer and solar panel
- Water inlet filter
- 108 mm Bauer water inlet

AVAILABLE OPTIONS

- Watering boom
- Blow out compressor
- Rewind by engine
- Engine hydraulics
- Nelson Big Gun/Komet Twin Ultra

DIMENSIONS

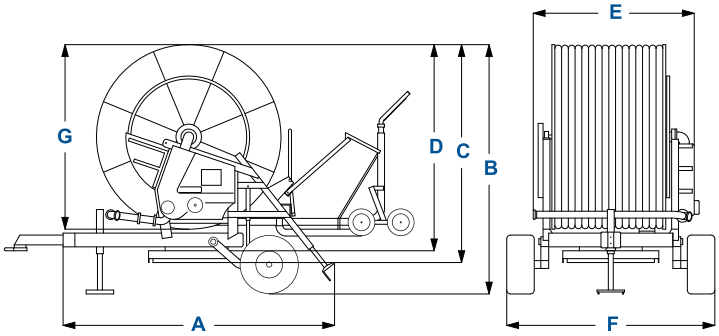

A inch	B inch	C inch	D inch	E inch	F inch	G inch
143	162	145	138	92	96	125

SPECIFICATIONS

- 1804 feet, 4.02” i.d. hose (125 mm x 550 m)
- Sime-Explorer gun -- 32/34/36mm nozzles
- Dry Weight: 11,643 lbs | Wet Weight: 20,640 lbs
- Turbine Drive

PERFORMANCE SUMMARY

Nozzle Size	Flow Rate (GPM)	Inlet Press. (PSI)	Sprinkler Press. (PSI)	Width 75% 25% Overlap (FT)
26 mm / 1.0 in	250	114	73	250
28 mm / 1.1 in	289	124	73	275
30 mm / 1.2 in	333	135	73	275
32 mm / 1.3 in	378	149	73	285

Performance Chart

SOUTHERN IRRIGATION

VR7/1 - 125 x 550

OCMIS

VR7/1 - 125 x 550 PERFORMANCE CHART

SPRINKLER		SPRINKLER THROW	RECOMENDED	WATER DELIVER		AREA	inch OF RAIN ON IRRIGATED STRIP AND RECOMENDED PRESSURE AT THE MACHINE																	
nozzle			STRIP 80%	gallon	gallon	POSITION	0,394	inch	0,591	inch	0,788	inch	0,985	inch	1,182	inch	1,379	inch	1,576	inch	1,97	inch	2,364	inch
	psi	feet	feet	MIN.	HOUR	ACRES	feet	psi	feet	psi	feet	psi	feet	psi	feet	psi	feet	psi	feet	psi	feet	psi	feet	psi
mm	44	138	220	193	11.595	10,49	214	79	143	76	107	76	86	75	71	73	61	73	54	73	43	72	36	72
26,0	58	154	247	223	13.401	11,84	221	99	148	97	111	97	89	95	74	94	63	94	55	94	44	92	37	92
inch	65	161	257	237	14.224	12,38	225	110	150	107	113	107	90	105	75	104	64	104	56	104	45	102	38	102
1,0	73	171	273	250	14.985	13,20	224	120	149	117	112	117	90	115	75	114	64	114	56	114	45	113	37	113
	80	177	283	262	15.713	13,75	226	130	151	127	113	127	90	126	75	124	65	124	57	124	45	123	38	123
recommended gear speed							**2.2**		**3.1**		**3.1**		**3.1**		**1.2**		**1.2**		**2.1**		**2.1**		**2.1**	
mm	44	144	231	224	13.432	11,03	237	85	158	82	119	82	95	81	79	79	68	79	59	79	47	78	40	78
28,0	58	167	268	259	15.539	12,93	237	107	158	105	118	105	95	103	79	102	68	102	59	102	47	100	39	100
inch	65	171	273	275	16.474	13,20	246	118	164	116	123	116	98	114	82	113	70	113	62	113	49	111	41	111
1,1	73	184	294	289	17.361	14,30	241	129	161	127	120	127	96	125	80	124	69	124	60	124	48	122	40	122
	80	190	304	303	18.200	14,86	244	140	162	137	122	137	97	136	81	135	70	135	61	135	49	133	41	133
	87	197	315	317	19.040	15,42	246	151	164	148	123	148	99	147	82	146	70	146	62	146	49	144	41	144
recommended gear speed							**2.2**		**3.1**		**3.1**		**3.1**		**1.2**		**1.2**		**1.2**		**2.1**		**1.1**	
mm	44	157	252	257	15.428	12,11	250	93	166	90	125	90	100	88	83	87	71	87	62	87	50	85	42	85
30,0	58	171	273	298	17.852	13,20	267	117	178	114	133	114	107	113	89	111	76	111	67	111	53	110	44	110
inch	65	177	283	315	18.929	13,75	272	129	182	126	136	126	109	125	91	123	78	123	68	123	54	122	45	122
1,2	73	184	294	333	19.958	14,30	277	141	185	138	138	138	111	137	92	135	79	135	69	135	55	134	46	134
	80	190	304	348	20.909	14,86	280	153	187	150	140	150	112	149	93	147	80	147	70	147	56	146	47	146
	87	197	315	365	21.875	15,42	283	165	189	162	142	162	113	161	94	159	81	159	71	159	57	158	47	158
recommended gear speed							**3.2**		**2.2**		**3.1**		**3.1**		**1.2**		**1.2**		**1.2**		**2.1**		**1.1**	
mm	58	177	283	338	20.307	13,75	292	128	195	125	146	125	117	124	97	123	83	123	73	123	58	121	49	121
32,0	65	184	294	359	21.527	14,30	299	142	199	139	149	139	119	137	100	136	85	136	75	136	60	134	50	134
inch	73	190	304	378	22.699	14,86	304	155	203	152	152	152	122	150	101	149	87	149	76	149	61	148	51	148
1,3																								
recommended gear speed							**3.2**		**2.2**		**3.1**		**3.1**		**1.2**		**1.2**		**1.2**		**1.2**		**1.1**	

These tables are merely indicative because they have been worked out through mathematical formula and according to average working conditions .
Consequently Ocmis declines any responsabilites deriving from their application.

Drum
Engineered for compactness. Painted with epoxy primer and polyurethane compound paint using vanguard techniques.

PE Hose
Top quality PE hose manufactured to resist very heavy drags and very high working pressures.

Frame:
The chassis is ade of bolted sections, composed of strong steel beams electronically welded by robots and hot dipped galvanized.

Gun Stand
Gun stand available in 2-wheel, 4-wheel or 5-wheel versions according to model. Special versions available to accommodate the most varied work conditions.

Turntables
Turntables are mounted on large diameter bearings for easy rotation.

Stabilizing Legs
Large hydraulic or mechanical stabilizer legs assure stability to the machine in the toughest working conditions.

Hose Guide System
A scroll bar system guarantees a perfect layering of the polyethylene hose and reduces hose wear to a minimum.

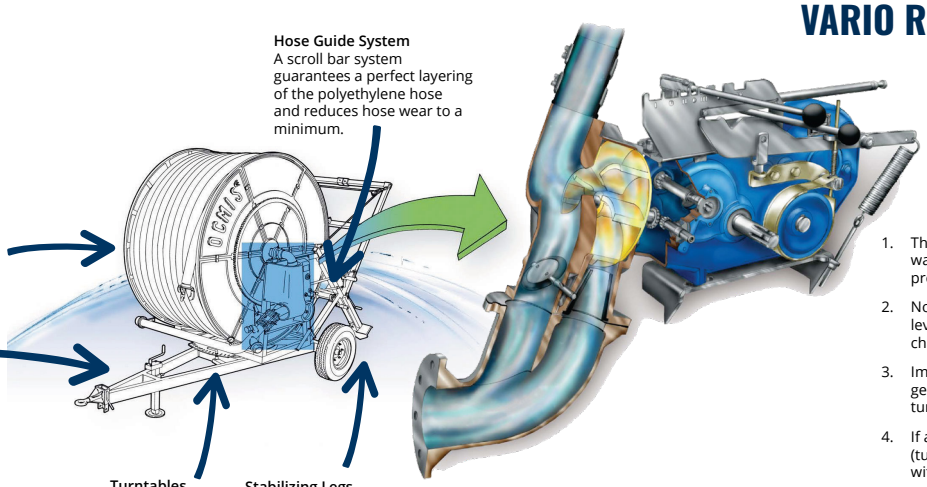

VARIO RAIN
pure technology

The Vario Rain Gearbox is derived from Ocmis' continued investment in R&D, resulting in a gearbox with lower pressure drops, easy to use, versatile, robust, and needing minimum maintenance.
Standard on all V-series reels.

1. The most efficient turbine on the market-- requiring less water and pressure to run gearbox, allowing more water and pressure to flow through to the gun.
2. No back-stop (no anti-reverse pawl) - middle position of gear lever is for transport (locks down drum). No backlash when changing speeds.
3. Impossible to break gearbox by winding up hose with PTO; gear shift must be in correct position otherwise reel will not turn.
4. If a rock locks up the impeller you can reverse the impeller (turning the outlet shaft next to turbine), release the rock without having to open up the turbine.
5. You can always see what speed you are in:
   Upper lever - Variable speeds: 1-2-3-4
   Lower Lever - Left position: hose/cart pull-out (& PTO wind-up)
   - Centre Position: drum lock down (for transport)
   - Right Position: working position